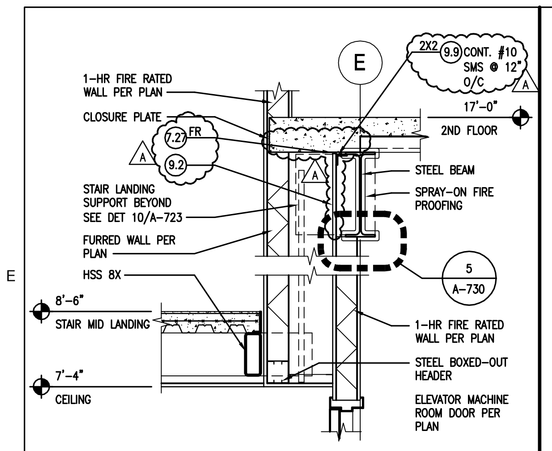

30 | STAIR 1 @ MID LANDING

A-441 REF. A-441 SCALE: 3/4" = 1'-0"

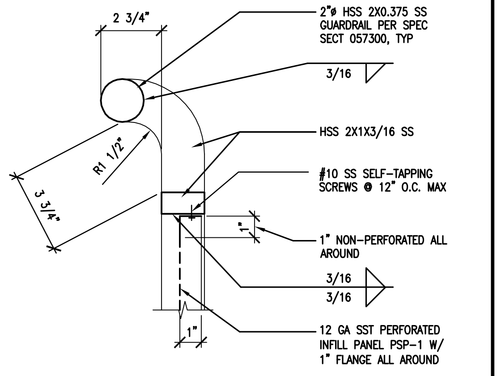

29 | GUARDRAIL TYPE A DETAIL

A-441 REF. A-441 SCALE: 3" = 1'-0"

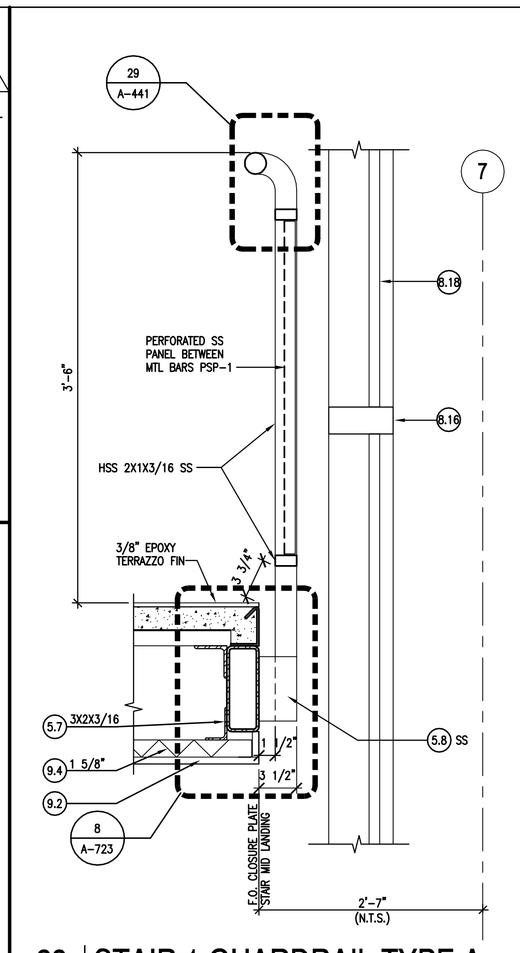

23 | STAIR 1 GUARDRAIL TYPE A

A-441 REF. A-441 SCALE: 1 1/2" = 1'-0"

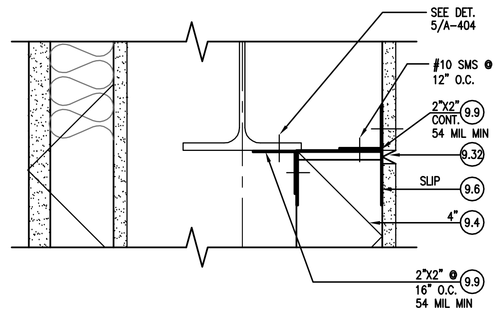

19 | WALL JOINT DETAIL

A-441 REF. SCALE: 3" = 1'-0"

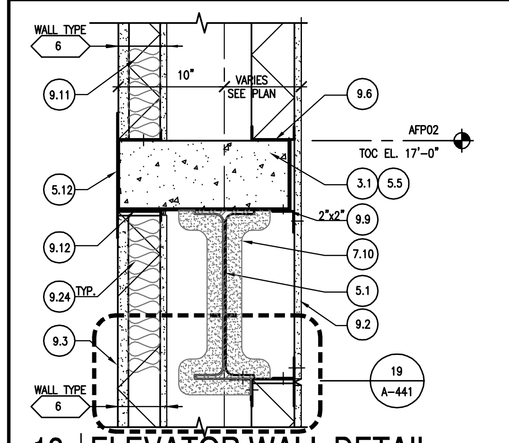

18 | ELEVATOR WALL DETAIL

A-441 REF. A-440 SCALE: 1 1/2" = 1'-0"

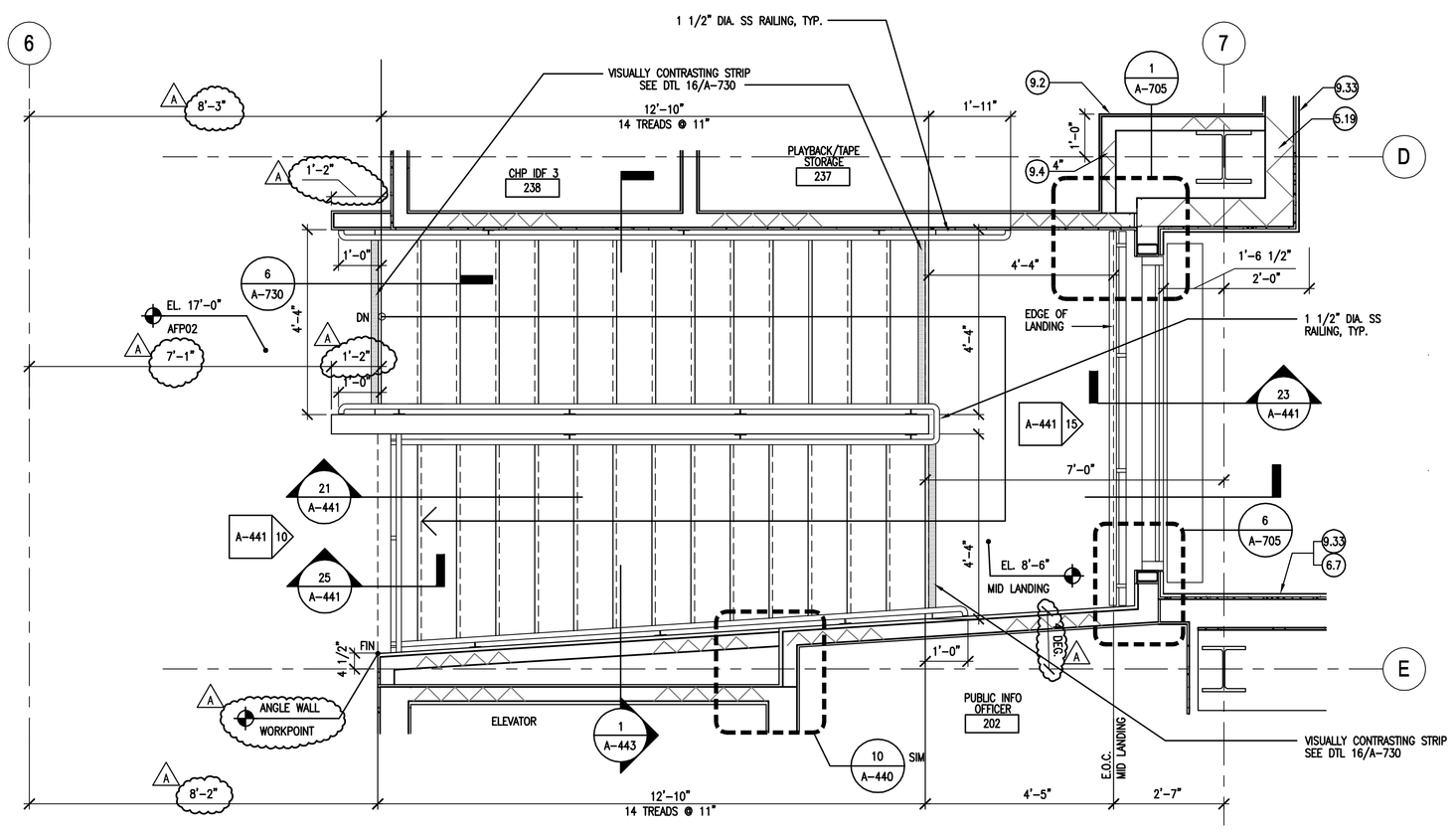

13 | ENLARGED STAIR 1- SECOND FLOOR

A-441 REF. A-202A SCALE: 1/2" = 1'-0"

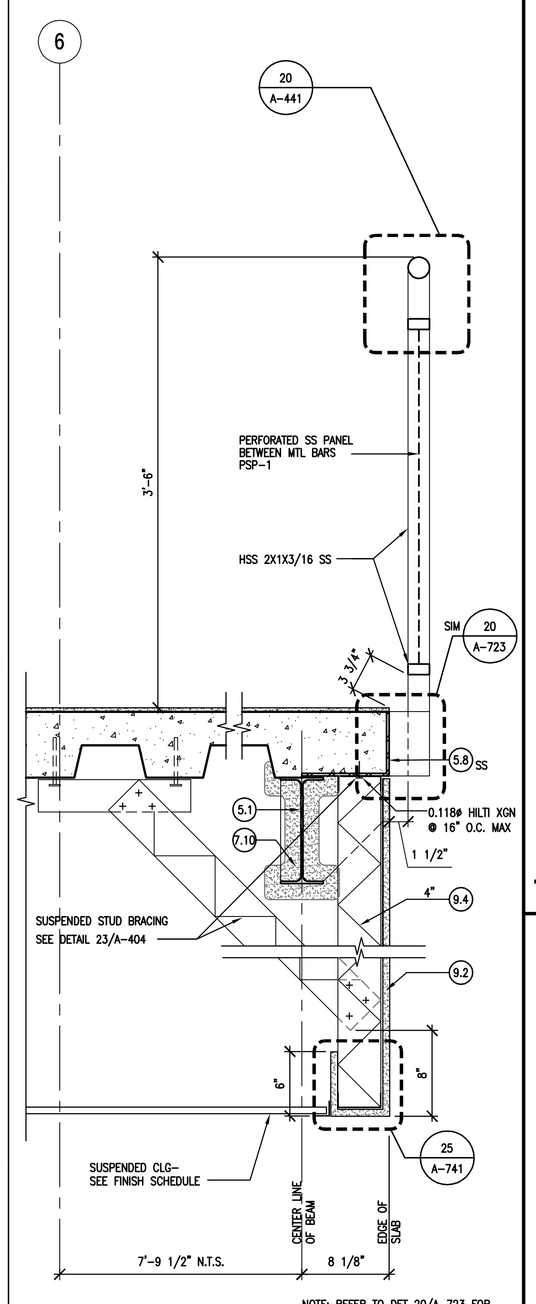

25 | STAIR 1 GUARDRAIL TYPE B

A-441 REF. A-441 SCALE: 1 1/2" = 1'-0"

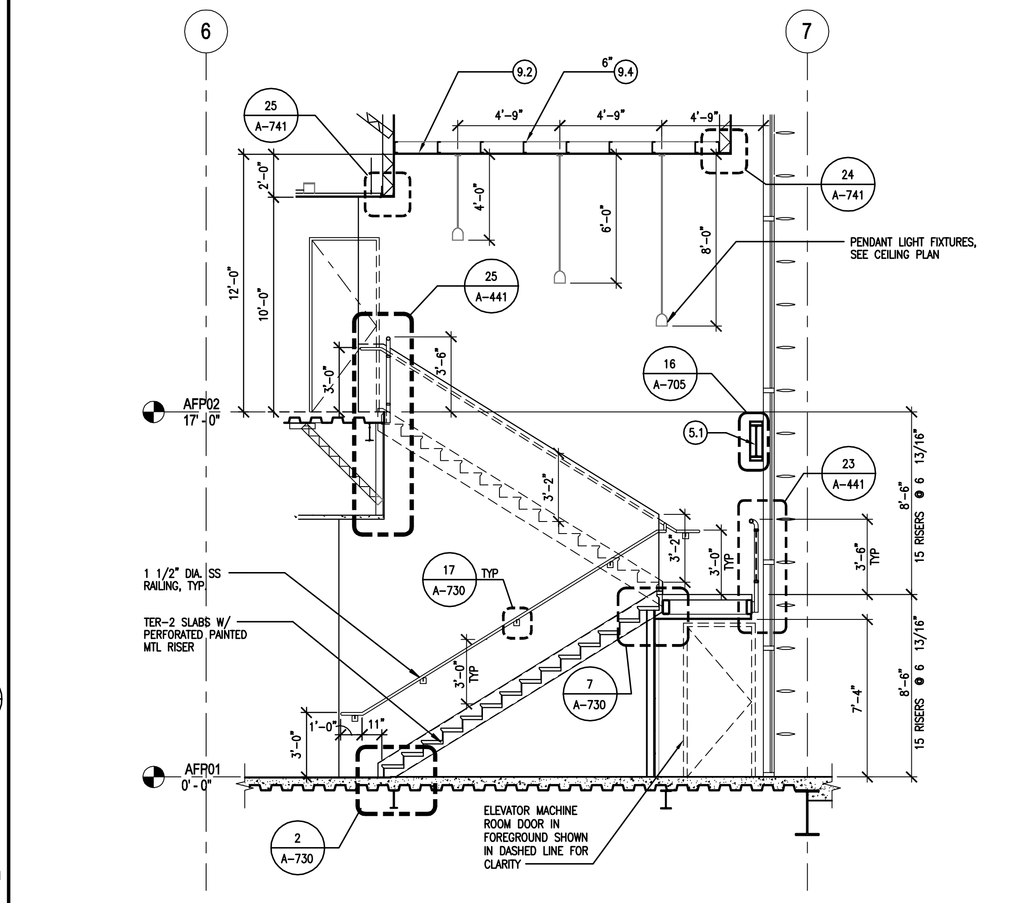

21 | STAIR 1 SECTION

A-441 REF. A-441 SCALE: 1/4" = 1'-0"

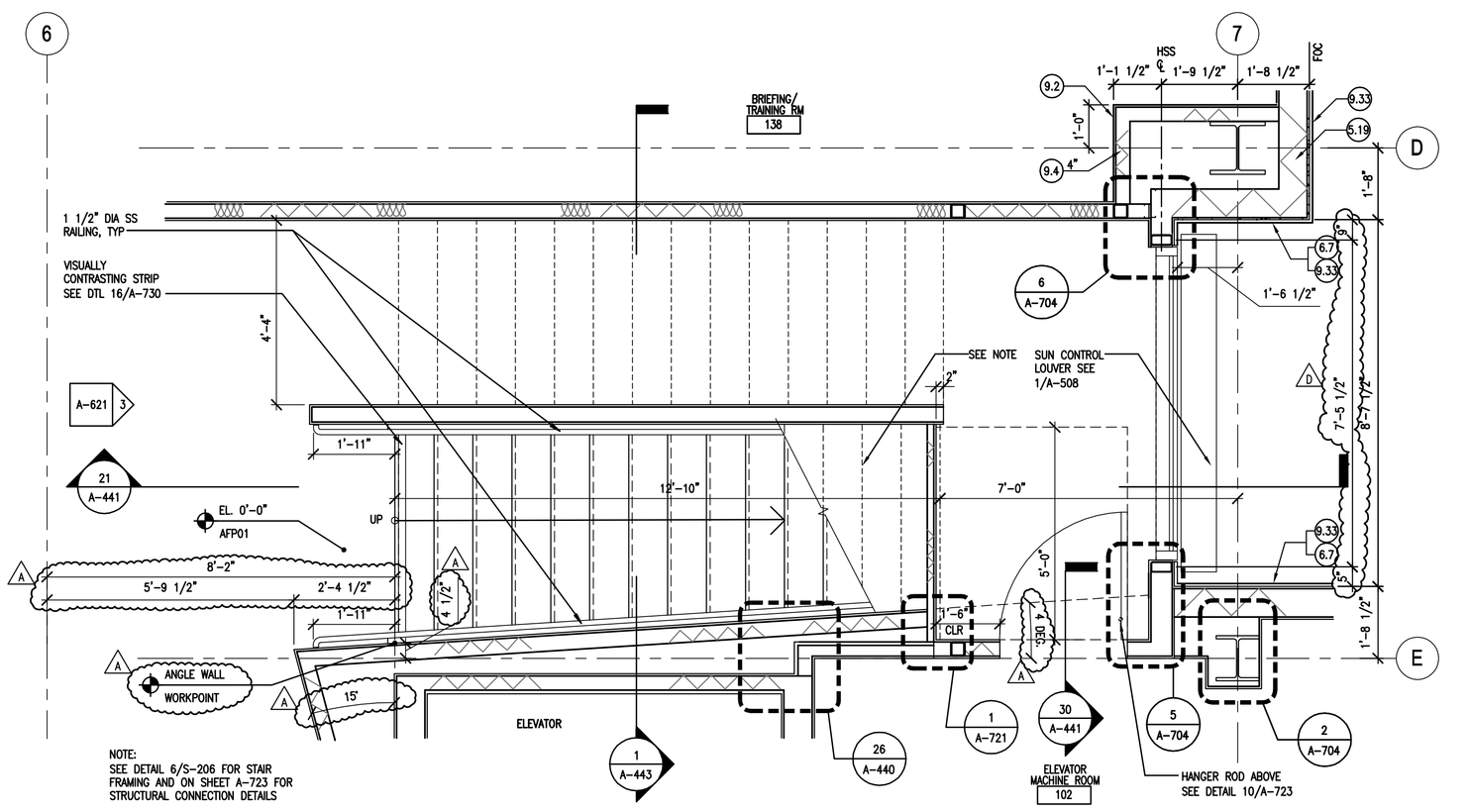

11 | ENLARGED STAIR 1- FIRST FLOOR

A-441 REF. A-201A SCALE: 1/2" = 1'-0"

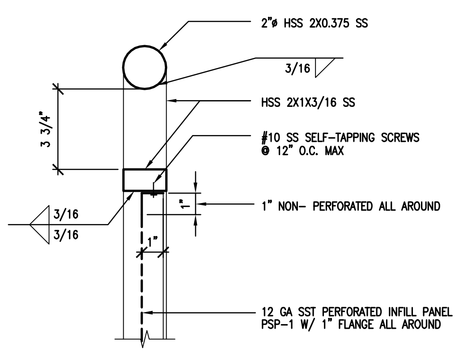

20 | GUARDRAIL TYPE B DETAIL

A-441 REF. SCALE: 3" = 1'-0"

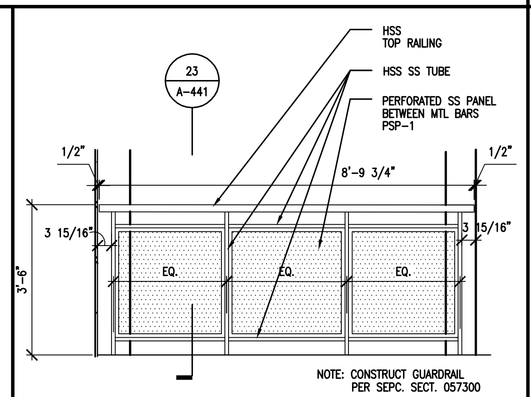

STAIR 1 15 | GUARDRAIL TYPE A ELEV.

A-441 REF. A-441 SCALE: 1/2" = 1'-0"

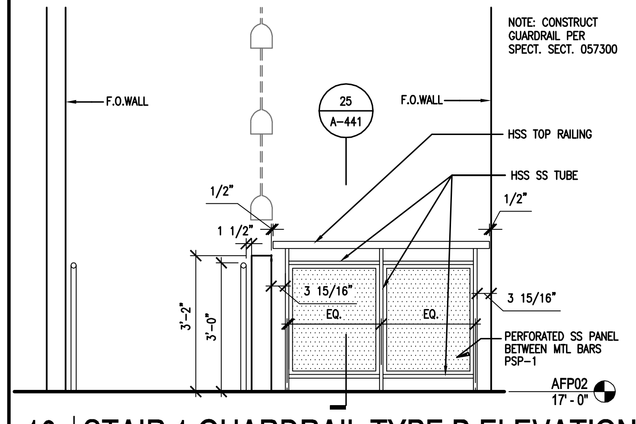

10 | STAIR 1 GUARDRAIL TYPE B ELEVATION

A-441 REF. A-441 SCALE: 1/2" = 1'-0"

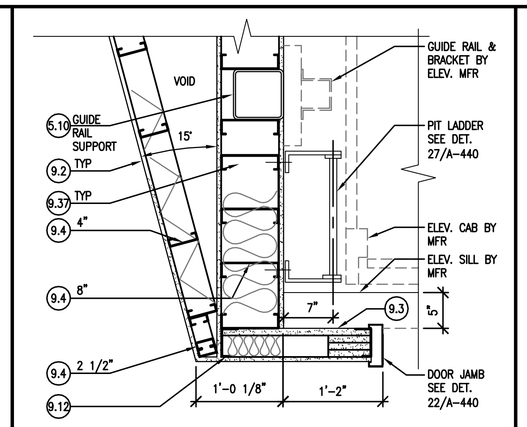

5 | 1 HR SHAFT WALL DETAIL

A-441 REF. A-440 SCALE: 1" = 1'-0"

NOTE:
1. ALL METAL STUD FRAMING AND CONNECTION SHALL BE PER DETAILS ON DWG A-404.
2. FOR METAL STUDS INDICATED SEE LEGEND & TABLE ON 15/A-404.

SCALE: 1/4"=1'-0" 0 2 4 8 12
SCALE: 1/2"=1'-0" 0 1 2 4 6
SCALE: 1-1/2"=1'-0" 12" 9" 6" 3" 0 1
SCALE: 3"=1' 0 3" 6" 9" 12"

PROJECT

INLAND EMPIRE TMC
Caltrans CHP
DISTRICT 8 / INLAND DIVISION
13892 VICTORIA STREET
FONTANA, CA 92336

CLIENT

DGS
STATE OF CALIFORNIA
DEPARTMENT OF GENERAL SERVICES
REAL ESTATE SERVICES DIVISION
PROJECT MANAGEMENT BRANCH
400 R STREET, SUITE 5100
SACRAMENTO, CA 95814
PROJECT DIRECTOR : RAFAT ALAFRANJI
TELEPHONE : (916) 376-1738

DESIGNER

DMJM H&N | AECOM
999 TOWN & COUNTRY ROAD, ORANGE CALIFORNIA 92868
T: 714-567-2400 F: 714-543-0955 www.dmjm.com

CONSULTANT

DSA STAMP

IDENTIFICATION STAMP
DIVISION OF THE STATE ARCHITECT
OFFICE OF REGULATION SERVICE
APPL. #: 04-109200-2
AC _____ FLS _____ SS _____
DATE _____
FILE NUMBER: RESD

STATUS

JULY 30, 2008

ISSUE

MARK	DATE	DESCRIPTION
D	10/31/08	BID PERIOD ADDENDUM #6
A	9/26/08	BID PERIOD ADDENDUM

PROJECT NO: 60004333.4000

DRAWN BY: GJ
CHECKED BY: JR

STAMP

REGISTERED PROFESSIONAL ENGINEER
LARRY MOULU ROUTON
No. C 24473
Exp. 12-31-09
STATE OF CALIFORNIA

SHEET TITLE

ENLARGED STAIR 1 PLANS AND SECTION

A-441

DWG: Q:\Caltrans\ETMC\500 CAD\A\Sheet\A-441.dwg User: Johnsong3
DATE: Oct 30, 2008 - 3:17:47 pm Images:
Xrefs: "XBDR

© 2003 DMJMH+N, Inc. Rev. 2003-1